NAVIGATOR™
Portable Balances

Multi-Purpose Portable Balances Suitable for Everyday Weighing

OHAUS raises the bar in price-performance ratio with the newly-designed Navigator series which is perfect for general weighing applications in laboratory, industrial and education settings. Ruggedly constructed and multifunctional, the Navigator is a powerful balance that can handle a diverse range of weighing applications with features such as fast stabilization time, overload protection at four times its rated capacity, and easy operation.

Unique Features:

- Navigator offers essential weighing applications at a competitive price point.
- Advanced weighing technology offers one-second stabilization for fast and accurate weighing results, improving operator efficiency, productivity and throughput.
- Overload protection system that can withstand loads up to four times the rated capacity safeguards the balance.

NAVIGATOR™ *Applications*

Education

With an overload protection system which is rated at four times its capacity, the Navigator is ideal for demanding applications in the classroom such as parts counting, percent weighing, and checkweighing. The space-saving design (for NV models only) allows for stackable storage. Additionally, the Navigator's portability makes it ideal for experiments out in the field.

Laboratory and Research

Designed to be easy to clean, precise and simple to use in laboratory environments. Simple set up and percent weighing mode make this the ideal solution for laboratory applications such as formulation, quality inspections, testing and experimentation.

Industry and Manufacturing

Designed to be robust, fast and accurate for ideal use in light medium duty industrial applications, including paint and ink mixing, packaging, sampling and parts counting. Up to 400% safe overload enhances protection of internal components, with an ultra-fast, one-second stabilization time to improve operator efficiency and productivity.

Home Office, Commercial Business and Manufacturing

Designed to be tough, portable and reliable for ideal use in shipping and receiving, home office and warehouse environments. Battery operation, counting and checkweighing modes also expand range of use for hobbies, inventory management, inspection and quality control. In addition, the Navigator NVT models are available EC Type approved (Class III) for commercial business or any applications requiring approval.

Food and Portioning

Designed to be hygienic, low-maintenance and durable for ideal use in food service, portioning and pre-packaging. Weighing units such as kg, g, lb, oz, lb:oz, and percent and checkweighing modes enhance its usefulness in behind-the-counter, prep station and kitchen environments.

NAVIGATOR™ *Portable Balances*

Fast Weighing Speed:
As Fast As 1second
Efficient Weighing

Newly-Expanded Models
with Drafshield
Accurate Weighing

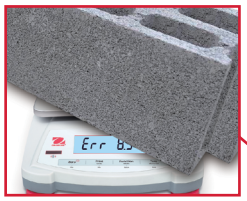

4 times Superior
Overload Protection
Durable & Reliable

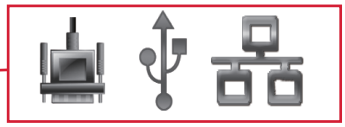

Multi-Connectivity Options
Easy for Data Logging

Stacking & Storage Cover
Space Saving

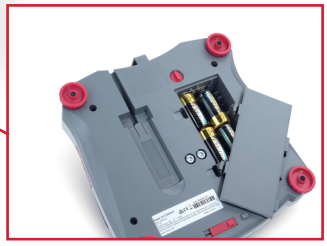

Up to 270 hours Battery Life
Uninterrupted operation

Large Pan & High Capacity
Weigh Big Items

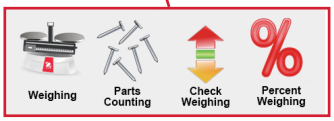

Multiple Application Modes

NAVIGATOR™ *Portable Balances*

Model	NV123	NV223	NV323	NV222	NV422	NV622	NV1202	NV2202	NV3202	NV221	NV621	NV1201	NV2201
Capacity (g)	120	220	320	220	420	620	1200	2200	3200	220	620	1200	2200
Readability (g)	0,001			0,01						0,1			
Repeatability (std Dev.)	0,004			0,01	0,02		0,045			0,1			
Linearity (g)	0,009			0,02			0,06			0,2			
Span Calibration Mass*	100	200	300	200		300	1000	2000	3000	200	300	500	1000
Linearity Calibration Mass*	50, 100 g	100, 200 g	150, 300 g	100, 200 g	200, 400 g	300, 600 g	500 g, 1 kg	1 kg, 2 kg	1,5 kg, 3 kg	100, 200 g	300, 600 g	500 g, 1 kg	1 kg, 2 kg
Stabilization Time(s)	2,5			1	1,5		2			1			
Construction	ABS housing and stainless steel pan												
Draftshield	Removable Draftshield			n/a									
Calibration	User-selectable external span or linearity calibration / Digital with external weight												
Tare Range	Full capacity by subtraction												
Weighing Units	g, kg, N, oz, ozt, dwt, lb, lb:oz, ct, grain												
Application Modes	Weighing, Parts Counting, Percent Weighing, Checkweighing												
Power Requirement	AC adapter (included) or 4 C batteries (not included)												
Typical Battery Life	200 hours			270 hours			200 hours			270 hours			
Temperature Range	10 °C to 40 °C at 10% to 85% relative humidity, non-condensing												
Storage Conditions	-20 °C to 55 °C at 10% to 90% relative humidity, non-condensing												
Communication	RS232, USB, or Ethernet (available as accessories)												
Display Type	Liquid Crystal Display (LCD) with backlight												
Display Size	20 mm digits												
Draftshield Dimensions	Ø120 mm, height: 42 mm			n/a									
Pan Size (W × D)	Ø93 mm			Ø145 mm			190 × 144 mm						
Balance Dimensions (W × D × H)	204 × 230 × 107 mm with draft shield 204 × 230 × 74 mm without draft shield			204 × 230 × 70 mm									
Shipping Dimensions (W × D × H)	385 × 335 × 170 mm			300 × 250 × 134 mm									
Net Weight	1,0 kg												
Shipping Weight	1,5 kg												

*not included

Outline Dimensions

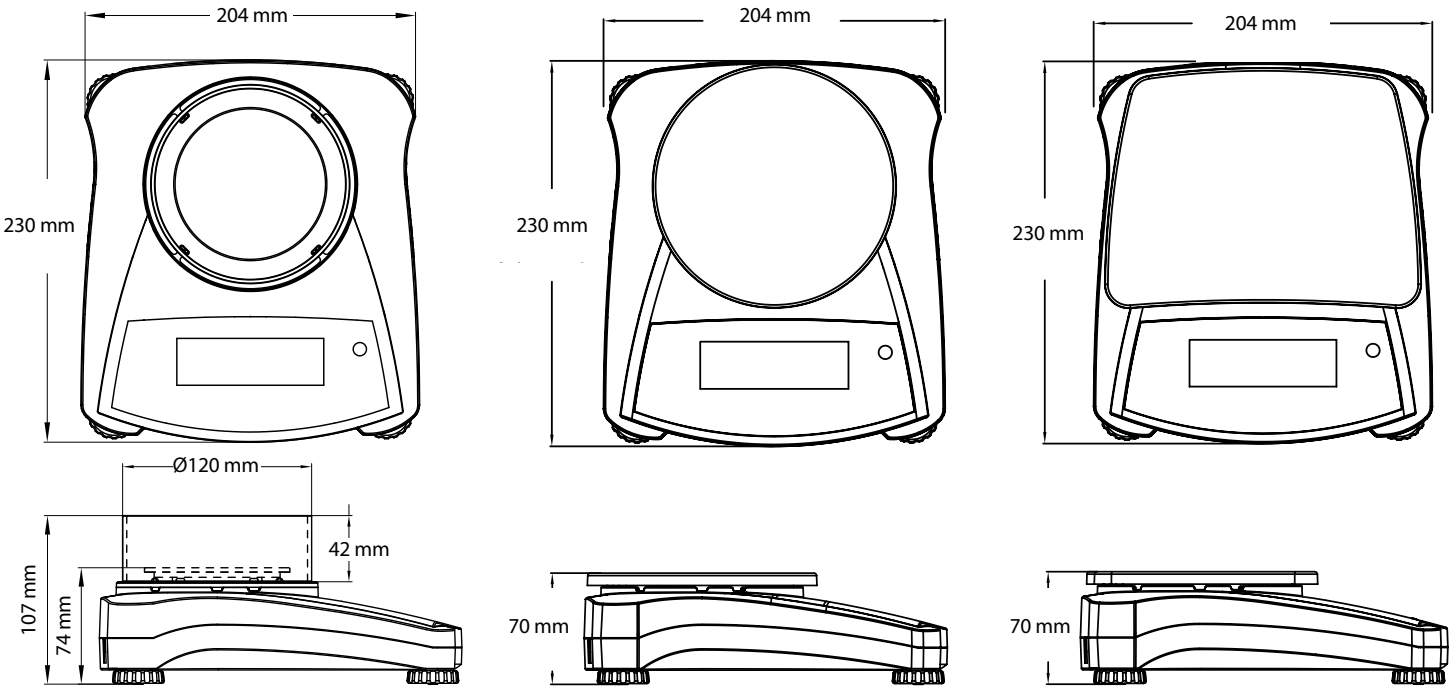

NAVIGATOR™ *Portable Balances*

Model	NVT2201	NVT4201	NVT6201	NVT10201	NVT2200	NVT6200	NVT12000	NVT22000
Capacity (g)	2200	4200	6200	10200	2200	6200	12000	22000
Readability (g)	0,1				1			
Repeatability (std Dev.)	0,1	0,2		0,25	1			
Linearity (g)	0,2			0,4	2			
Span Calibration Mass*	1000	2000	5000		1000	5000		10000
Linearity Calibration Mass*	1 kg, 2 kg	2 kg, 4 kg	3 kg, 6 kg	5 kg, 10 kg	1 kg, 2 kg	3 kg, 6 kg	5 kg, 10 kg	10 kg, 20 kg
Stabilization Time(s)	1	1,5			1			
Construction	ABS housing and stainless steel pan							
Draftshield	n/a							
Calibration	User-selectable external span or linearity calibration / Digital with external weight							
Tare Range	Full capacity by subtraction							
Weighing Units	g, kg, N, oz, ozt, dwt, lb, lb:oz, ct, grain							
Application Modes	Weighing, Parts Counting, Percent Weighing, Checkweighing							
Power Requirement	AC adapter (included) or 4 C batteries (not included)							
Typical Battery Life	270 hours			200 hours	270 hours			
Temperature Range	10°C to 40°C at 10% to 85% relative humidity, non-condensing							
Storage Conditions	-20°C to 55°C at 10% to 90% relative humidity, non-condensing							
Communication	RS232, USB, or Ethernet (available as accessories)							
Display Type	Liquid Crystal Display (LCD) with backlight							
Display Size	20 mm digits							
Draftshield Dimensions	n/a							
Pan Size (W × D)	230 × 174 mm							
Balance Dimensions (W × D × H)	240 × 250 × 74 mm							
Shipping Dimensions (W × D × H)	385 × 335 × 170 mm							
Net Weight	1,5 kg							
Shipping Weight	2,3 kg							

*not included

Outline Dimensions

NVT

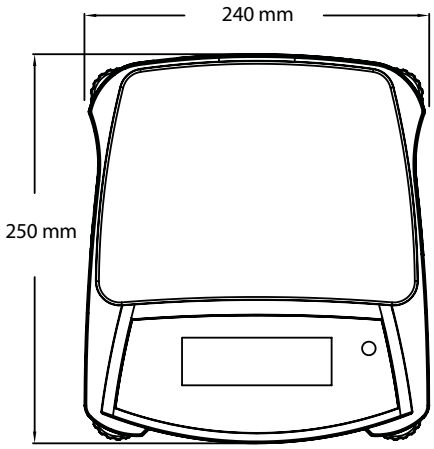

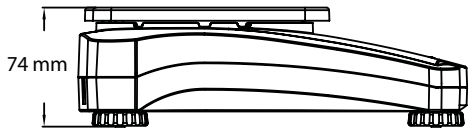

Built-in Application Modes

- **Weighing** – Determines the weight of items on the pan in the selected unit of measure.
- **Parts Counting** – Counts the number of pieces on the pan using a uniform weight.
- **Percent Weighing** – Measures the weight of a sample displayed as a percentage of pre-established reference weight.
- **Check Weighing** – Compares the weight of sample against target limits.

NAVIGATOR™ *Portable Balances*

Specifications

Model	NVT1601M	NVT3200M	NVT6400M	NVT16000M
Capacity (g)	1600	3200	6400	16000
Readability (g)	0,5	1	2	5
Verification Interval e (g)	0,5	1	2	5
Span Calibration Mass*	1 kg	2 kg	5 kg	10 kg
Linearity Calibration Mass*	1 kg; 1,5 kg	2 kg; 3 kg	3 kg; 6 kg	10 kg; 15 kg
Stabilization Time (s)	1 s			
Construction	ABS housing & stainless steel pan			
Calibration	User-selectable external span or linearity calibration / Digital with external weight			
Tare Range	Full capacity by subtraction			
Weighing Units	Gram, Kilogram			
Application Modes	Weighing, Percent Weighing, Parts Counting, Check Weighing			
Keypad	4 mechanical keys, plus 1 touchless sensor			
Power Requirement	AC adapter (included) or 4 C batteries (not included)			
Typical Battery Life	270 hours			
Specified Temperature Range	0 °C to 40 °C at 10% to 85% relative humidity, non-condensing			
Storage Conditions	-20 °C to 55 °C at 10% to 90% relative humidity, non-condensing			
Communication	RS232, USB, or Ethernet (available as accessories)			
Display Type	Liquid Crystal Display (LCD) with backlight			
Display Size	20 mm digits			
Pan Size (W × D)	230 × 174 mm			
Balance Dimensions (W × D × H)	240 × 250 × 74 mm			
Shipping Dimensions (W × D × H)	385 × 335 × 170 mm			
Net Weight	1,5 kg			
Shipping Weight	2,3 kg			

*not included

Other Standard Features and Equipment

ABS housing, stainless steel pan, transportation lock, menu and calibration lockswitch, slip-resistant and adjustable feet, leveling bubble, mechanical and software overload/underload protection, stability indicator, low battery indicator, auto shut-off, user-selectable print options, user-selectable communication settings

Compliance

- **Product Safety:** IEC/EN 61010-1
- **Electromagnetic Compatibility:** IEC/EN 61326-1 Class B, Basic environments; FCC Part 15 Class B; Canada ICES-003 Class B
- **Compliance Marks:** CE; RCM

Accessories

USB Interface 83032108
RS232 Interface 83032107
Ethernet Interface 83032109
Rechargeable Battery Kit 83032106
Carrying Case 30467963
Adapter with Plugs 30467987
Adapter, 12V 0,5A, Fixed UK Plug 30467994
Printer, SF40A, ... 30064202
Weigh Below Kit, NV, NVT 30628012
Stacking Kit, × 1, NV** 30467917
Stacking Kit, × 4, NV** 30467918
In-Use Cover, NV 30809921
In-Use Cover, NVT 30809922

**Draftshield needs to be removed before applying for models with draftshield

8776641_C 20260831 © Copyright OHAUS Corporation

OHAUS Europe GmbH

e-mail: ssc@ohaus.com
Tel: 0041 22 567 53 19
e-mail: tsc@ohaus.com
Tel: 0041 22 567 53 20

www.ohaus.com

The management system governing the manufacture of this product is ISO 9001:2015 certified.

OHAUS®