PALLET LABELING SYSTEM

LEGI-AIR AP182RT

Pallet labeler labels GS1-compliant on up to 3 sides in 3 orientations

+ Three label orientations: portrait, landscape and diagonal
+ Three-sided labeling with only two pallet stops
+ Labels up to 120 pallets per hour
+ Infrequent roll changes thanks to large label rolls
+ Clear system structure for maintenance without a technician
+ Label size min. 50 x 50 mm, max. 150 x 210 mm

COMPACT 3-SIDED LABELER WITH ROTATING TAMP

The AP182RT version of our pallet labeler has a rotating tamp, which enables it to apply labels in various formats upright, diagonally and across onto pallets ready for dispatch. For example, portrait-format transport labels can be processed or landscape-format labels with content information as well as warning notices that are applied at an angle.

The Legi-Air AP182RT pallet labeler creates and processes GS1-compliant labels in DIN A5 or DIN A6 format; other label sizes are optionally available. The use of label rolls with a diameter of 350 millimetres ensures an efficient and long production time. The AP182RT achieves high speeds of 120 pallets per hour for two-sided labeling and 90 pallets per hour for three-sided labeling.

The labels are printed by an integrated print module. A wide selection of high-quality print modules from renowned manufacturers is available for configuration, achieving print resolutions of up to 600 dpi. As it does not require a safety fence thanks to its intrinsically safe design, the system saves costs and effort in logistics.

APPLICATIONS

MADE IN GERMANY

WEBER MARKING SYSTEMS

PALLET LABELING SYSTEM

LEGI-AIR AP182RT

SPECIAL FEATURES

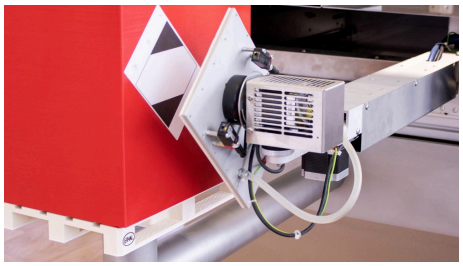

PIVOTING APPLICATOR HEAD

The system is equipped with a flexibly pivoting applicator head that can apply DIN A5 or A6 pallet labels either in portrait or landscape format. The individually printed labels are applied precisely either by an air blast from a short distance or by direct contact with a spring-mounted dispensing plate. Even in gaps as narrow as 250 mm, front-side labeling is possible. In addition, the system labels up to three pallet sides in GS1-compliant fashion and – unlike the AP182 – can also place labels diagonally, for example for hazardous goods marking.

TWO OPTICAL SENSORS ON THE TAMP

The first sensor serves as an optically variable stroke sensor. It detects the distance to the pallet and, depending on the setting, triggers the blow-off of the label from the tamp and the retraction of the tamp to the home position from a distance of around 15 millimetres. The second built-in optical sensor is directed inwards, towards the spring bearing of the tamp.

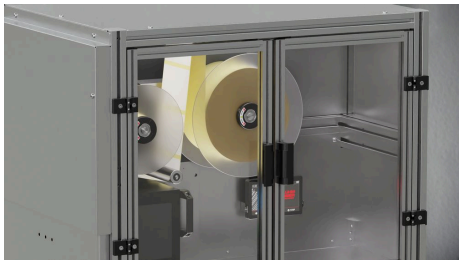

SAFE THANKS TO ENCLOSURE

The rectangular enclosure of the pallet labeler consists of a profile frame construction which, with the exception of the transparent side door, is enclosed by stainless steel sheets. The winding and unwind unit and print module can be moved and are easily accessible for quick and easy material changes.

FREELY PROGRAMMABLE TRAVEL PATHS

The freely programmable travel paths reliably compensate even for large layer tolerances – for example in cases of underloading or overloading. The system also demonstrates its full strength in mixed operation with industrial and Euro pallets. This flexibility ensures that a wide variety of palletizing requirements can be met safely and precisely. As a result, the process remains stable, efficient, and adaptable, even when conditions vary.

PALLET LABELING SYSTEM

LEGI-AIR AP182RT

TECHNICAL SPECIFICATIONS

APPLICATION DATA

Labeling mode	in stop mode
Label application rate max.	2 1/min ❶
Positioning accuracy (+/-)	2 mm ❷
Label size min. (WxL)	50 x 50 mm
Label size max. (WxL)	150 x 210 mm
Pallet labeling	1 side; 2 sides; 3 sides
Label roll diameter max.	350 mm ❸

❶ 1–2 pallets / min (3-side labeling) ❷ with stopped pallet ❸ up to 600 linear meters

FEATURES

Technology	Pneumatic
Mounting orientation independence	No
Label unwinding	Stepper motor
Label rewinding	Stepper motor
Label shortage warning	yes
Web break detection	optional

HMI

HMI version	Touch display

PHYSICAL ASPECTS

System dimensions (HxWxL)	989 x 1142 x 1142 mm ❶
Weight	130 kg ❷
IP ingress protection	IP 20
Approvals	CE
Rel. humidity non-condensing	15 - 95 %
Ambient temperature	2 - 35°C
Noise level	77 dB ❸

❶ without system supports ❷ depending on frame height ❸ A-weighted sound pressure level

CONNECTIONS

Supply voltage	92 - 263 V
Mains frequency	50 - 60 Hz

PALLET LABELING SYSTEM

LEGI-AIR AP182RT

CONNECTIONS

Current	5 A
Compressed air connection	6 bar [1]
Interfaces	USB; RS232; Applicator port; Ethernet IPv4

[1] in accordance with DIN ISO 8573-1

PALLET LABELING SYSTEM

LEGI-AIR AP182RT

TECHNICAL DRAWINGS

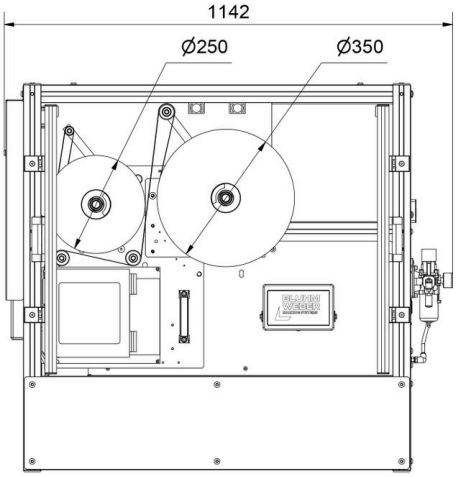

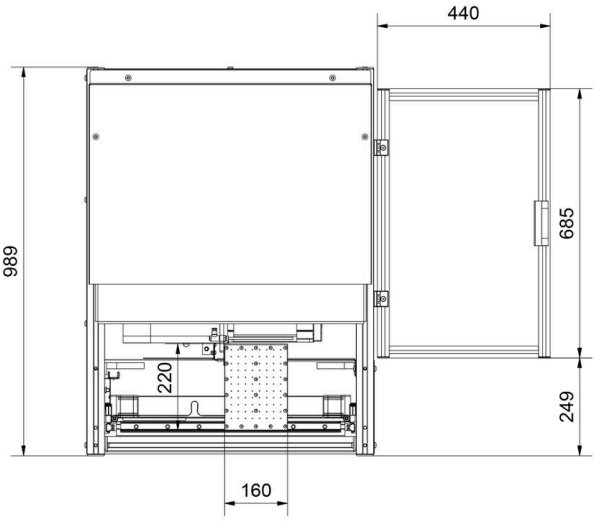

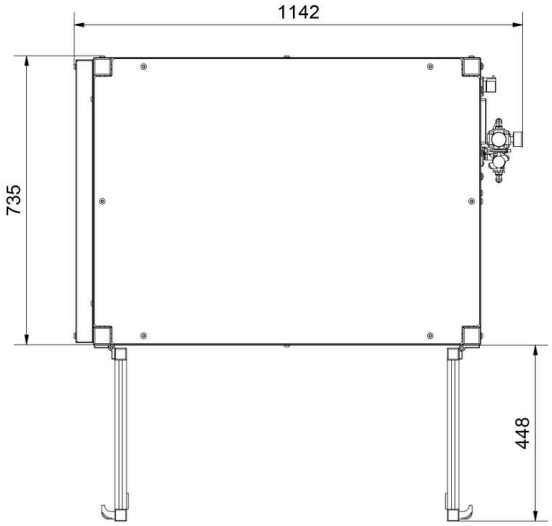

PALLET LABELING SYSTEM

LEGI-AIR AP182RT

PRINTER OPTIONS

ZEBRA ZE511

Highest printing performance for industrial applications

Print width up to	104 mm
Print speed up to	457 mm/sec
Printhead resolution	203 dpi, 305 dpi, 609 dpi
Printing process	Thermal transfer, Thermal direct, RFID

ZEBRA ZE521

Highest printing performance for industrial applications

Print width up to	168 mm
Print speed up to	356 mm/sec
Printhead resolution	203 dpi, 305 dpi
Printing process	Thermal transfer, Thermal direct, RFID

SATO S84NX

Precise, fast and reliable industrial printing

Print width up to	104 mm
Print speed up to	406 mm/sec
Printhead resolution	203 dpi, 305 dpi, 609 dpi
Printing process	Thermal transfer, Thermal direct, RFID

SATO S86NX

Precise, fast and reliable industrial printing

Print width up to	167.5 mm
Print speed up to	355.6 mm/sec
Printhead resolution	203 dpi, 305 dpi
Printing process	Thermal transfer, Thermal direct, RFID

CAB PX Q4

High-precision print module for automated labeling in industry and logistics

Print width up to	108.4 mm
Print speed up to	300 mm/sec
Printhead resolution	203 dpi, 305 dpi, 609 dpi
Printing process	Thermal transfer, Thermal direct

CAB PX Q6

High-precision print module for automated labeling in industry and logistics

Print width up to	168 mm
Print speed up to	250 mm/sec
Printhead resolution	203 dpi, 305 dpi
Printing process	Thermal transfer, Thermal direct

PALLET LABELING SYSTEM

LEGI-AIR AP182RT

NOVEXX XDM 944

Maximum speed for industrial labeling

Print width up to	106 mm
Print speed up to	400 mm/sec
Printhead resolution	300 dpi
Printing process	Thermal transfer, Thermal direct

NOVEXX XDM 945

Maximum speed for industrial labeling

Print width up to	128 mm
Print speed up to	350 mm/sec
Printhead resolution	305 dpi
Printing process	Thermal transfer, Thermal direct

NOVEXX XDM 946

Maximum speed for industrial labeling

Print width up to	160 mm
Print speed up to	300 mm/sec
Printhead resolution	305 dpi
Printing process	Thermal transfer, Thermal direct

PALLET LABELING SYSTEM

LEGI-AIR AP182RT

YOUR RELIABLE PARTNER

+ PERSONAL POINT OF CONTACT

Your personal point of contact from our team will listen to you and explain the options.

+ MADE IN GERMANY

With our Made in Germany production, we guarantee quality and availability.

+ APPROPRIATE SOLUTION

We develop the optimal solution for your requirements, independently of technology.

+ SEAMLESS SERVICE

Our comprehensive service network is always on hand to help.

+ REGIONALLY ROOTED, GLOBALLY CONNECTED

As a family-owned company with branches worldwide, customer relations are always our top priority.

Weber Marking Systems GmbH

Maarweg 33 / 53619 Rheinbreitbach
T +49 (0)2224 77 08 0 / info@webermarking.de
weber-marking.com

2026-09-25 | en_INT

MADE IN GERMANY

WEBER MARKING SYSTEMS