PHARMACEUTICAL & NUTRACEUTICAL METAL DETECTION SYSTEMS

FOR GRANULAR & POWDER PRODUCTS

CEIA METAL DETECTION SYSTEMS offer **detection, construction quality** and **reliability characteristics** that make them the most suitable and effective solution to automatic elimination of metal contaminants.

THS/FFV21-S *FOR FREE-FALL APPLICATIONS WITH EJECTION VALVE*

THS/G21 *SERIES FOR FREE-FALL OR PIPE LINE APPLICATIONS*

THS/PH21N FFV *FOR FREE-FALL APPLICATIONS WITH EJECTION VALVE*

MULTI • CHECK

www.multicheckas.com

Quality Control at its finest

THS/PH21N-FFV

INTEGRATED SYSTEMS FOR GRANULAR AND POWDER PRODUCTS

KEY FEATURES

- State-of-the Art Quality Control of powder and granular products
- Detection and ejection of magnetic, non-magnetic and stainless steel metal contaminants
- Automatic Calibration Test
- Very Compact size
- FDA 21 CFR part 11 compliant
- Fast detection and rejection speed
- Fail-Safe Operations
- AISI 316L stainless steel construction
- ATEX ZONE 21 available on demand

AUTOMATIC CALIBRATION TEST

THROUGHPUT
Powder throughput, up to 1900 kg/hour

PRODUCT INFEED CONVEYOR
in a squares shape
internal size
94 mm x 34 mm

MARKED COMPLIANCE
Control Power Box available according to UL 508A and CSA-C22.2 No. 286

EJECTION SYSTEM
The ejection system is fitted with an innovative deflector that features quick response, precise ejection of the contaminated product and high production flow rate

Parts in contact with the product have a surface roughness below 0,5 Ra

CEIA reserves the right to make changes, at any moment and without notice, to the models (including programming), their accessories and options, to the prices and conditions of sale.

THS/FFV21SG

INTEGRATED SYSTEMS FOR GRANULAR AND POWDER PRODUCTS

KEY FEATURES

- Superior and consistent detection
- Ultra High Sensitivity to all metals
- Automatic Calibration Test
- FDA 21 CFR part 11 compliant
- Marked Control Power Box available according to UL 508A and CSA-C22.2 No. 286
- ATEX ZONE 22 available on demand

BENEFITS

- ✔ INCREASE PRODUCTIVITY
- ✔ ENSURE COMPLIANCE
- ✔ ENHANCE OPERATOR SAFETY

AISI 316L STAINLESS STEEL CONSTRUCTION

PRODUCT INFEED CONVEYOR
in a round 60 mm diameter pipe in order to avoid powder jam

THROUGHPUT
Powder throughput up to 2500 kg/hour

ROBUST
AISI 316L stainless steel construction

DETECTION
Best in class detection to magnetic and non-magnetic metals

STRAIGHT PASSAGE OF THE PRODUCT
on the rejection system area in order to avoid powder jam

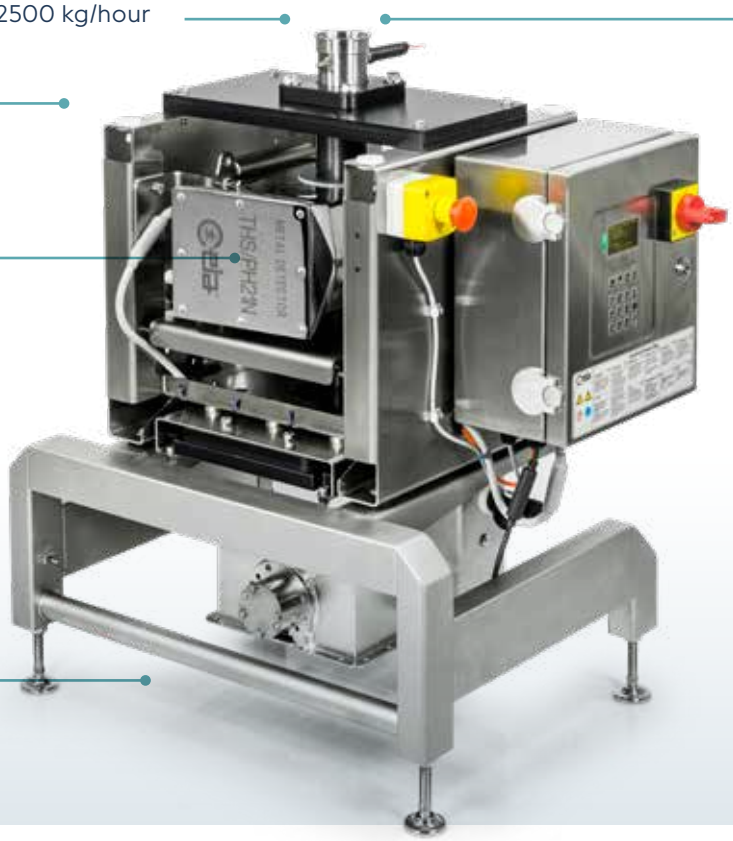

MARKED COMPLIANCE
Control Power Box available according to UL 508A and CSA-C22.2 No. 286

LOCAL AND ADVANCED CONNECTIVITY

Parts in contact with the product have a surface roughness below 1 Ra

CEIA reserves the right to make changes, at any moment and without notice, to the models (including programming), their accessories and options, to the prices and conditions of sale.

THS/FFV21-S

FREE-FALL INTEGRATED SYSTEM WITH METAL DETECTOR AND EJECTION VALVE

GENERAL DESCRIPTION

- **THS/FFV21** Integrated System is especially designed for the inspection of granular and powder products and the **elimination of any contaminating metals, whether magnetic, non-magnetic or stainless-steel**.
- The **carefully selected materials** used in construction of the THS/FFV21 **do not interact with food products**, and thus do not modify or alter their composition.
- The design of the system incorporates a **fast reject valve drive response time** to detect and reject the contaminant without slowing down the product flow.
- The construction guarantees **quick, easy cleaning of the components that are in contact with the product**. The technological choices made by CEIA allow the parts in contact with the product to be disassembled and maintained in a short time.

ATEX ZONE 21 available on demand

THROUGHPUT
Powder throughput up to 31000 kg/hour (depends on the Metal Detector aperture)

ROBUST
AISI 316L stainless steel construction

AUTOMATIC CALIBRATION TEST

FAST DETECTION AND REJECTION SPEED

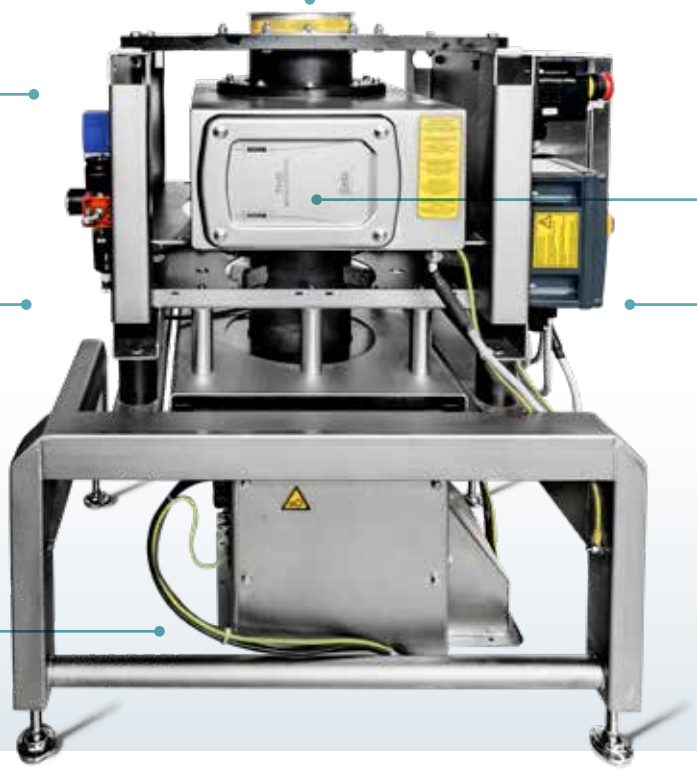

MULTI-SPECTRUM TECHNOLOGY
Unique metal detection technology that both optimizes sensitivity to all metal contaminants and minimizes product effect in a very wide range of possible products

FAIL-SAFE OPERATIONS

Parts in contact with the product have a surface roughness below 1 Ra

CEIA reserves the right to make changes, at any moment and without notice, to the models (including programming), their accessories and options, to the prices and conditions of sale.

THS/G21

METAL DETECTORS SERIES FOR FREE-FALL OR PIPE LINE APPLICATIONS

***THS/G21-F series** with Reduced Metal Free Zone for limited space installations, while maintaining optimal detection of all metals.*

GENERAL DESCRIPTION

- The **THS/G21** series is designed to inspect powders, granules and other loose materials transported in free-fall through tubes and pipelines.
- When fitted with a deflector, the THS/G21 becomes a system that **detects and removes any contaminating metals, both magnetic and non-magnetic**.
- Digital analysis of the signal provided by the antenna allows extremely **high levels of sensitivity, immunity to interference and operational stability** to be achieved.
- **The very high detection speed** of the THS/G21 allows the contaminated portion of product to be removed without slowing down the production flow.
- **Alternatively, when mounted on a packaging machine, the THS/G21 system** is able to send a command to produce a double bag around the contaminated product. This can later be identified and removed from the production cycle automatically.
- The system is designed to **communicate with external control systems**, either connected directly or via a communications network.

CONTROL POWER BOX

***THS/G21 series** - Standard anti-static pipe sizes available to suit all applications (ATEX ZONE 21 version available)*

CEIA reserves the right to make changes, at any moment and without notice, to the models (including programming), their accessories and options, to the prices and conditions of sale.

METAL DETECTORS CALIBRATION

A BEST-PRACTICE FOR QUALITY CONTROL

Standard ISO practices in instrumentation require a verification of the calibration at least once per year. In the food industry, Metal Detectors are typically verified, depending on the User internal Quality requirements, from one to four times per year.

Clearly, a complete calibration cannot be limited to the verification of the detection of the reference samples, as this single operation does not provide any information on the real sensitivity setting of the Metal Detector but that the alarm threshold is under the samples signal amplitude.

A COMPLETE CALIBRATION REQUIRES THE TRANSIT:

- **OF MULTIPLE DIAMETER CERTIFIED SPHERES**, in order to determine the diameter of the metal samples corresponding to the detection limit (or an equivalent instrumental method of signal quantification);
- **THROUGH THE AREA OF MINIMUM DETECTION STRENGTH** (typically, the centre of the aperture);
- **AT A MINIMUM AND MAXIMUM SPEED OF THE PRODUCT TRANSIT**

Beside the certified annual calibration, at least one daily verification of the calibration is customarily performed by the operators of the production lines by simply transiting through the aperture area of the Metal Detector certified metal spheres and verifying the system correct detection capability and ejection functioning.

The test should be performed by transiting the samples simultaneously to the product and in the centre of the aperture.

Depending on the number of detectors involved and of the test repetitions per day, this process can be quite time consuming, i.e. costly, involve the waste of a certain quantity of products and the risk to unintentionally contaminate the production with the metal samples. In addition, there is a risk of lack of consistency depending on operators skills and experience.

CEIA reserves the right to make changes, at any moment and without notice, to the models (including programming), their accessories and options, to the prices and conditions of sale.

CEIA AUTOMATIC CALIBRATION TEST

INCREASING TIME OPTIMIZATION AND PRODUCTIVITY

To comply with the daily Metal detection and ejection verification requirements the **CEIA Metal Detectors THS 21 Series provide the following powerful solution package**:

- **A full digital internal structure, completely free from internal trimmers to be calibrated**, as the analog processing has been replaced by digital numerical analysis. Therefore, there is no impact of mechanical or temperature stresses on the calibration of the Detector.
- **An automatic, wide dynamics, antenna balance tracking system** to maintain in-range performances in all installation environments.
- **A continuous embedded Self-Calibration control** which spans from the emission up to the reception and processing circuitry, ensuring stability and both detection and product-effect cancellation consistency.
- **A continuous Auto-Test function which generates stimuli corresponding to the manual metal samples transits**. The resulting detection signals are compared to the references recorded during the Factory Acceptance Testing calibration, thus providing an outside of tolerance notification capability with a few seconds reaction time, independently from the sensitivity setting.
- **A calibration test in automatic mode**. During the automatic test, the Metal Detector provides a stimulus equivalent to the same excitation signal of the last manual test, verifying the correct activation of the alarm and the ejector.

  All test results are recorded into the Events buffer and are available for data traceability. The THS 21 Series provides the possibility to determine and program the mix of manual and automatic test operation in a wide ratio range, depending on the User Quality procedures, through the MTI parameter.

BENEFITS OF THE CALIBRATION TEST IN AUTOMATIC MODE

ENSURE COMPLIANCE

Electronic records are generated for every single automatic test, giving the customer reliable references in case of audit compliance.

ENHANCE PRODUCTIVITY

Approximately 3-4 minutes are required for performing a triple test (FE, NFE, AISI 316) which involves two operators, while automatic testing is completed in 10 seconds. Therefore, considering a testing frequency of 2 hours, by adding 5 automatic tests between two manual ones to reduce the manual test frequency to 12 hours, a typical powder ingredients manufacturer with 5 lines could save more than 2,000 man-hours and increase the production accordingly.

***AUTOMATIC TEST** is suitable for use in vertical pharmaceutical and nutraceutical inspection applications such as powders ingredients, API and granules.*

CEIA reserves the right to make changes, at any moment and without notice, to the models (including programming), their accessories and options, to the prices and conditions of sale.

MECHANICAL DATA

THS/PH21N-FFV

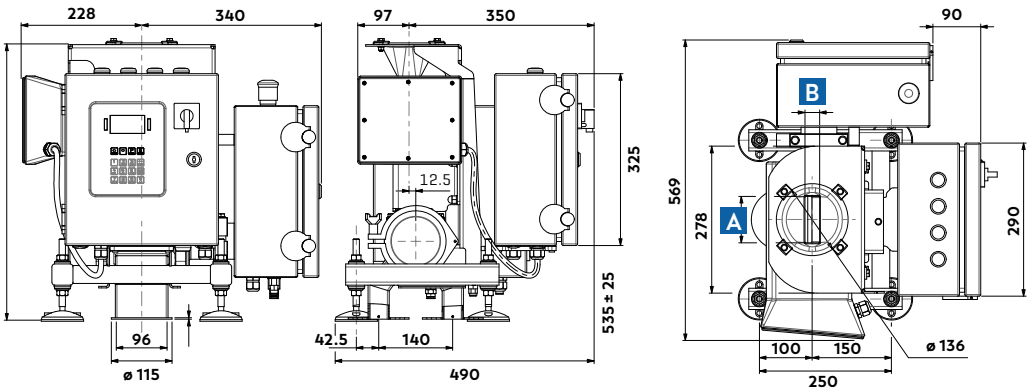

APERTURE SIZE	A	B
100 x 40	90	30
90 x 25	78	13

THS/FFV21SG

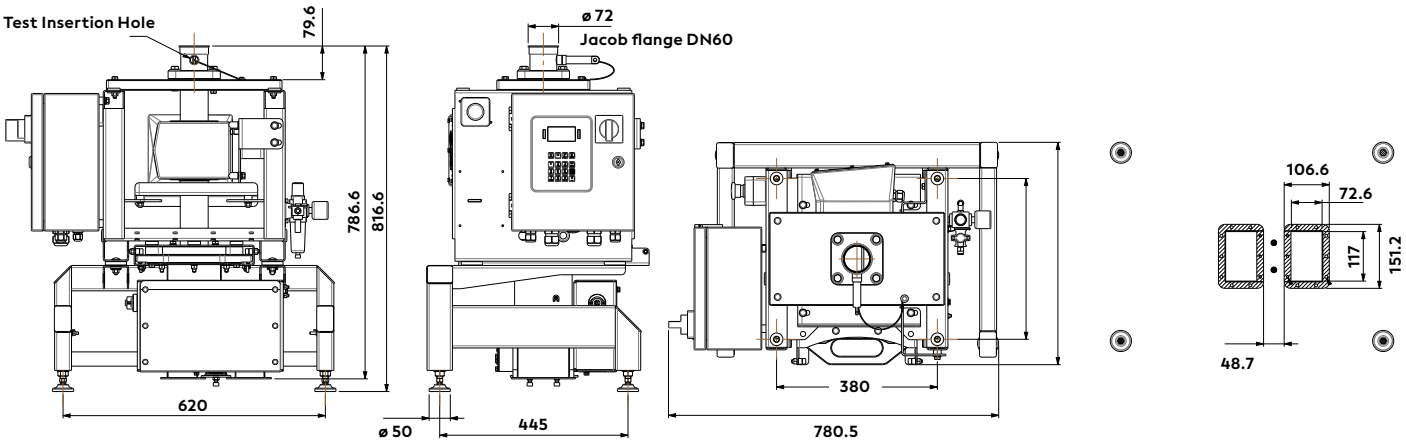

THS/FFV21

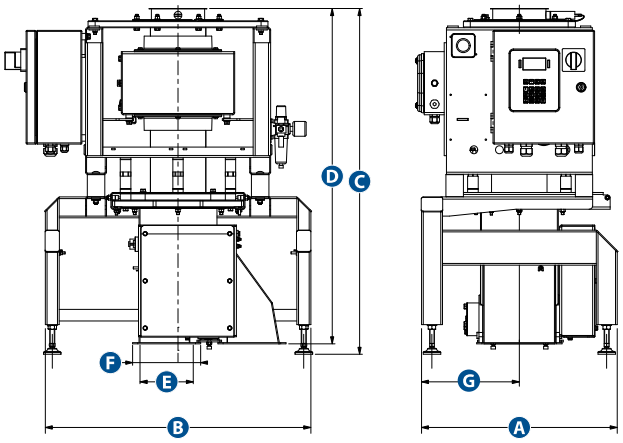

MODEL		A	B	C	D	E	F	G
THS/FFV x-75	Standard	505	660	856 ÷ 906	826	73 x 117	107 x 151	275
	With Reduction kit			766 ÷ 851	736			
THS/FFV x-100	Standard	505	660	849 ÷ 899	819	73 x 117	107 x 151	275
	With Reduction kit			759 ÷ 844	729			
THS/FFV x-150	Standard	560	760	990 ÷ 1030	960	155 x 204	195 x 244	380
	With Reduction kit			900 ÷ 975	870			
THS/FFV x-200	Standard	560	760	1030 ÷ 1070	1000	155 x 204	195 x 244	380
	With Reduction kit			940 ÷ 1015	910			

x = 21S / MS21S / 21ES

Dimensions in mm

CEIA reserves the right to make changes, at any moment and without notice, to the models (including programming), their accessories and options, to the prices and conditions of sale. DP002K0026v1002xuk