AUTOMATIC LABELING MACHINE

GESET 217

Top and bottom labeling of products

+ Very easy operation in daily use
+ 2 labels per product
+ Compact, easy to integrate design
+ Expandable with printing technologies for variable data
+ Label size min. 20 x 25 mm, max. 135 x 300 mm
+ Labels up to 300 products/min

DEVELOPED FOR EASY OPERATION AND SYSTEM INTEGRATION

The CE-compliant Geset 217 labeling system has been specially developed for maximum user-friendliness and easy integration into existing production lines. The modular system labels products reliably on the top and bottom. The integrated conveying system ensures a consistently stable product flow in the labeling process. Labeling is carried out by two Alpha HSM high-speed label applicators. Thanks to the central touch display and near-field operation, controlling is intuitive - ideal even for less trained personnel. Fast roll and format changes reduce downtimes and increase flexibility. Product and label-dependent parameters can be saved and called up directly. The compact construction with integrated controller housing, plug-in components and clear design saves space and simplifies maintenance. The system can also be fully remotely maintained for fast and efficient support. With various interfaces, it can be seamlessly integrated into modern production environments.

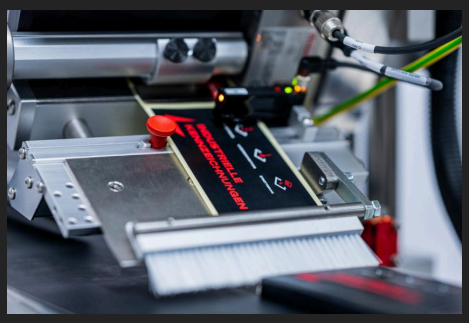

APPLICATIONS

MADE IN GERMANY

WEBER MARKING SYSTEMS

AUTOMATIC LABELING MACHINE

GESET 217

SPECIAL FEATURES

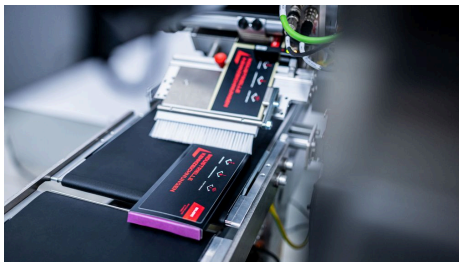

FOR PRODUCTS AND PACKAGING IN THE FOOD, PHARMACEUTICAL & CO.

The system labels packaging such as cartons, thermoformed trays, boxes and similar products and is suitable for applications in the food, pharmaceutical, healthcare and homecare industries. All labeling parameters can be stored product-specifically and called up with high accuracy - ideal for changing products and small batches.

OPTIONALLY EXPANDABLE WITH PRINTING TECHNOLOGIES

If variable data such as best-before date or batch number is to be printed on the labels before application, the system can be easily expanded. Special mountings for direct thermal transfer printers and inkjet printers are included in the module scope and are available immediately.

CONTROL CABINET WITH IP54 AND STAINLESS STEEL DESIGN OPTIONAL

The controller housing can optionally be replaced with a control cabinet with IP54 ingress protection - to protect against splashing water during cleaning. A stainless steel version of the system is also available, which increases the corrosion resistance of sensitive components such as the motor and conveyor belt in very humid and demanding environments.

AUTOMATIC LABELING MACHINE

GESET 217

TECHNICAL SPECIFICATIONS

APPLICATION DATA

Label position	Top; Bottom
Label application rate max.	200 1/min ❶
Product speed up to	30 m/min
Positioning accuracy (+/-)	1 mm ❷
Label size min. (WxL)	20 x 20 mm
Label size max. (WxL)	135 x 300 mm
Label roll diameter max.	300 mm

❶ abhängig von Produktabmessungen und Etiketten ❷ abhängig von Produkten und Etiketten

PRODUCT ITEM

Product dimensions max. (H×W×L)	225 x 200 x 400 mm
Product dimensions min. (H×W×L)	20 x 20 x 80 mm

FEATURES

Optional special equipment	TTO print unit; Markoprint X1 Printer; Stainless steel version
Product transport	Knife edge belt
Product management	yes

HMI

HMI version	Touch display

PHYSICAL ASPECTS

System dimensions (HxWxL)	1700 x 742 x 1425 mm
Weight	180 kg ❶
Approvals	CE; UKCA
Rel. humidity non-condensing	20 - 90 %
Ambient temperature	10 - 30°C
Noise level	75 dB ❷
Supply voltage	230 V
Mains frequency	50 Hz

❶ Without label roll ❷ A-weighted sound pressure level

GESET 217

CONNECTIONS

Compressed air connection	6 bar [1]
Interfaces	Digital I/O
Optional interfaces	Profinet; OPC UA Server [2]

[1] Only required in conjunction with optional equipment [2] PackML (vorbereitet)

AUTOMATIC LABELING MACHINE

GESET 217

TECHNICAL DRAWINGS

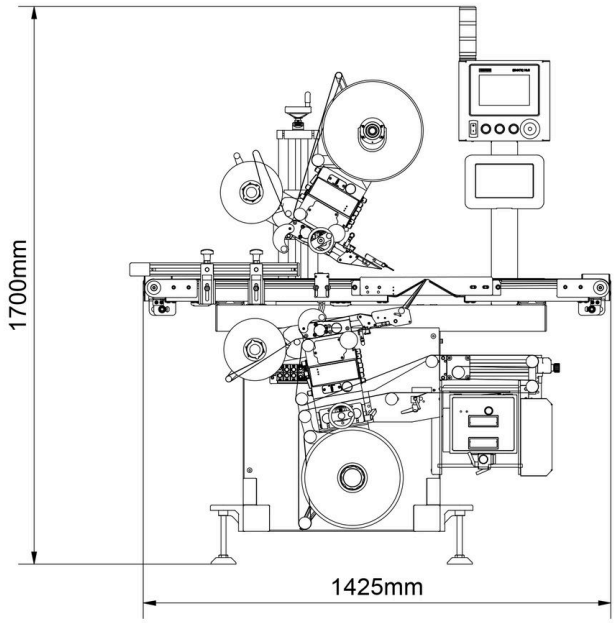

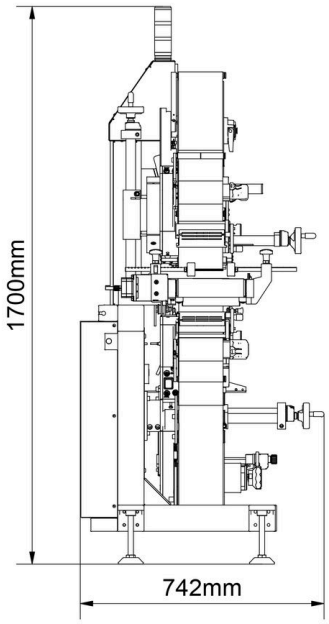

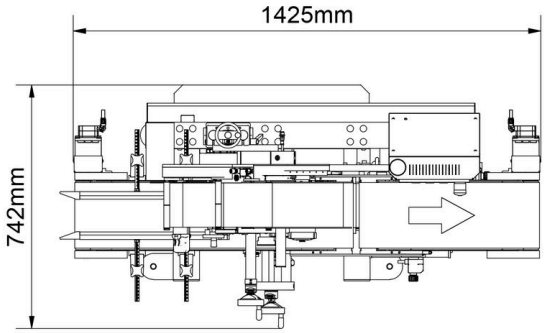

AUTOMATIC LABELING MACHINE

GESET 217

YOUR RELIABLE PARTNER

+ PERSONAL POINT OF CONTACT

Your personal point of contact from our team will listen to you and explain the options.

+ MADE IN GERMANY

With our Made in Germany production, we guarantee quality and availability.

+ APPROPRIATE SOLUTION

We develop the optimal solution for your requirements, independently of technology.

+ SEAMLESS SERVICE

Our comprehensive service network is always on hand to help.

+ REGIONALLY ROOTED, GLOBALLY CONNECTED

As a family-owned company with branches worldwide, customer relations are always our top priority.

Weber Marking Systems GmbH

Maarweg 33 / 53619 Rheinbreitbach
T +49 (0)2224 77 08 0 / info@webermarking.de
weber-marking.com

2026-09-28 | en_INT

MADE IN GERMANY

WEBER MARKING SYSTEMS