AUTOMATIC LABEL APPLICATOR

# ALPHA COMPACT

## Compact label applicator for applying pre-printed labels

+ Dispensing cycle rate up to 600 labels/min
+ Label size min. 10 x 20 mm, max. 150 x 300 mm
+ Integrated controller saves space
+ Automatic detection of missing labels (skip function)
+ Quick change of the label size

## APPLY PRE-PRINTED LABELS QUICKLY AND PRECISELY

The Alpha Compact is a powerful label dispenser for precise application of pre-printed labels. It is ideally suited for a wide range of products and packaging – whether in industry, logistics, or retail. Thanks to the integrated controller, the system is particularly space-saving, while labeling parameters, sensor calibration, and operating functions can easily be set via USB or an optional control panel.

The modular design allows for individual adaptation to production lines, with various applicators available. With cycle rates of up to 600 labels per minute and high dispensing accuracy, the Alpha Compact ensures efficient and reliable labeling – even in continuous operation. Robust mechanics, easy operation, and versatile interfaces make it the perfect choice for demanding applications.

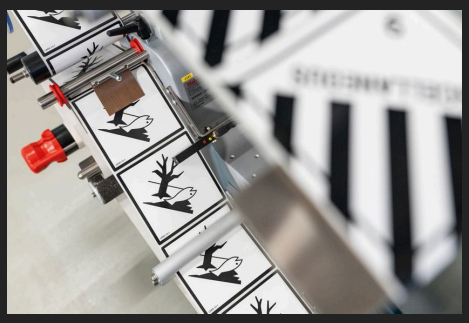

## APPLICATIONS

MADE IN GERMANY

WEBER MARKING SYSTEMS

AUTOMATIC LABEL APPLICATOR

# ALPHA COMPACT

## SPECIAL FEATURES

### INTEGRATED CONTROLLER AND EASY OPERATION

In the Alpha Compact, the entire control electronics are space-savingly integrated into the compact housing. This eliminates the need for external control units, reducing wiring effort and making integration into existing production lines easier. At the same time, connection options are available for an optional HMI display as well as an I/O interface. This allows the system to be operated intuitively, commissioned quickly, and run reliably in everyday use.

### FLEXIBLE CONFIGURATION VIA USB

The configuration of the Alpha Compact is designed to be particularly user-friendly. Via the USB connection, all labeling settings – such as start and stop functions, single-label feed, speed adjustment, or sensor calibration – can be transferred quickly and easily. Parameters can conveniently be stored or loaded on a PC, making it ideal for frequent product changeovers, centralized control, or status reporting during operation.

### HIGHEST APPLICATION PRECISION

The Alpha Compact impresses with its dispensing accuracy, ensured by an intelligent combination of automatic calibration and advanced label detection. This guarantees reliably precise results even at high cycle rates. These features make the system the ideal solution for applications where maximum accuracy and consistent quality are essential.

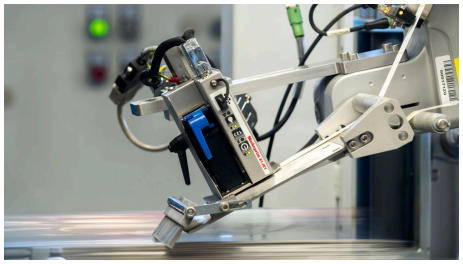

### EXPANDABLE

If required, the label dispenser can easily be expanded with additional modules. A particularly practical option is the integration of an inkjet printer to apply variable data such as batch numbers, expiration dates, or barcodes directly during the labeling process. This creates customized complete solutions that offer maximum flexibility and can be ideally adapted to growing production requirements.

AUTOMATIC LABEL APPLICATOR

# ALPHA COMPACT

# TECHNICAL SPECIFICATIONS

## APPLICATION DATA

| | |
|---|---|
| **Label position** | Side; Top; Front; reverse side; Bottom |
| **Labeling mode** | in stop mode; throughfeed [1] |
| **Label application rate max.** | 600 1/min |
| **Positioning accuracy (+/-)** | 0.8 mm |
| **Product speed up to** | 70 m/min |
| **Label size min. (WxL)** | 10 x 20 mm |
| **Label size max. (WxL)** | 152 x 300 mm |
| **Label roll diameter max.** | 300 mm |
| **Label roll core diameter (optional)** | 40 mm |

[1] Depending on the selected applicator

## FEATURES

| | |
|---|---|
| **Mounting orientation independence** | yes |
| **Label unwinding** | Passive |
| **Label rewinding** | Mechanically coupled |
| **Label shortage warning** | optional |
| **Web break detection** | optional |

## HMI

| | |
|---|---|
| **HMI version** | Touch display |

## PHYSICAL ASPECTS

| | |
|---|---|
| **System dimensions (HxWxL)** | 617 x 319 x 721 mm |
| **Weight** | 22 kg [1] |
| **IP ingress protection** | IP 40 |
| **Approvals** | CE |
| **Rel. humidity non-condensing** | 20 - 90 % |
| **Ambient temperature** | 10 - 38°C |
| **Noise level** | 70 dB [2] |

[1] depending on the version [2] A-weighted sound pressure level

## CONNECTIONS

| | |
|---|---|
| **Supply voltage** | 90 - 240 V |

AUTOMATIC LABEL APPLICATOR

# ALPHA COMPACT

## CONNECTIONS

| | |
|---|---|
| **Mains frequency** | 47 - 63 Hz |
| **Current** | 2 A |
| **Compressed air connection** | 6 bar [1] |
| **Interfaces** | USB; I/O interface |
| **Optional interfaces** | Ethernet |

[1] optional for pneumatic applicators

AUTOMATIC LABEL APPLICATOR

# ALPHA COMPACT

## TECHNICAL DRAWINGS

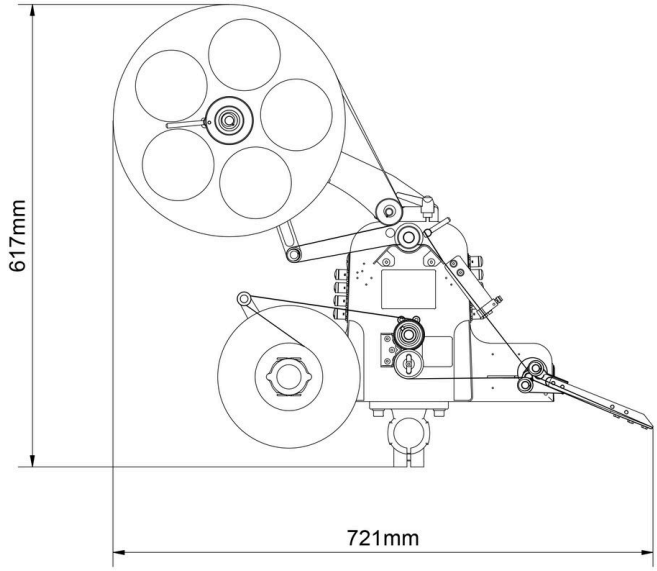


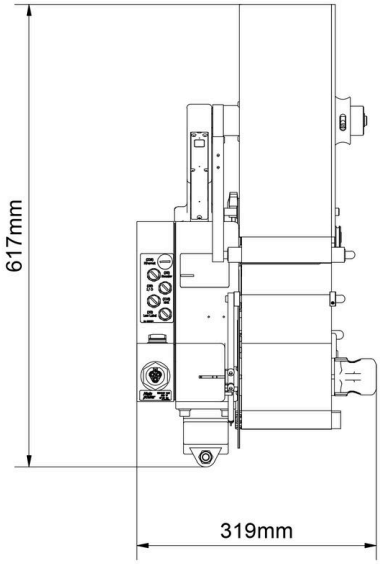


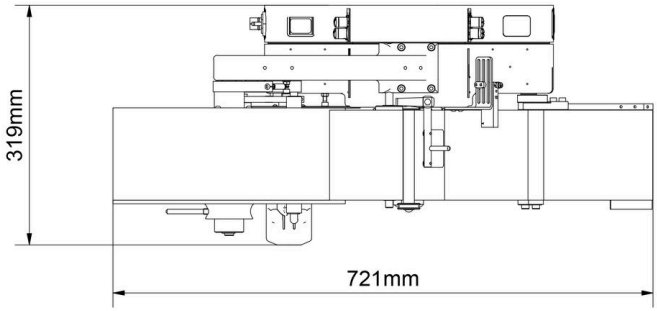

AUTOMATIC LABEL APPLICATOR

# ALPHA COMPACT

## APPLICATOR OPTIONS

### WIPE-ON DISPENSING TONGUE, RIGID

Universal Wipe-On peeler blade for precise labeling

| | |
|---|---|
| **Function** | Wipe-On |
| **Drive concept applicator** | Rigid, mechanical pendulum type |

### WIPE-ON DISPENSING TONGUE, PNEUMATIC

Robust pneumatic Wipe-On peeler blade with variable extension length

| | |
|---|---|
| **Function** | Wipe-On |
| **Drive concept applicator** | Pneumatic |

### TBM APPLICATOR

Compact linear applicator for very high cycle speeds

| | |
|---|---|
| **Function** | Tamp-Blow |
| **Drive concept applicator** | Pneumatic |
| **Dispensing stroke length** | 25 mm - 50 mm |

### EL APPLICATOR

Purely electric linear applicator for fast labeling

| | |
|---|---|
| **Function** | Tamp-Blow, Tamp-On, Wipe-On |
| **Drive concept applicator** | Stepper motor |
| **Dispensing stroke length** | 250 mm - 450 mm |

### KR APPLICATOR

Compact, precise linear applicator for tight installation spaces

| | |
|---|---|
| **Function** | Tamp-On, Tamp-Blow |
| **Drive concept applicator** | Pneumatic |
| **Dispensing stroke length** | 100 mm - 400 mm |

### HS APPLICATOR

Compact high-speed linear applicator for the shortest cycle times

| | |
|---|---|
| **Function** | Tamp-Blow, Tamp-On |
| **Drive concept applicator** | Pneumatic |
| **Dispensing stroke length** | 50 mm - 100 mm |

AUTOMATIC LABEL APPLICATOR

# ALPHA COMPACT

## ES APPLICATOR

Compact rotary applicator with electric drive

| | |
|---|---|
| **Function** | Tamp-Blow |
| **Drive concept applicator** | Stepper motor |
| **Rotation arm length** | 250 mm - 400 mm |

AUTOMATIC LABEL APPLICATOR

# ALPHA COMPACT

## YOUR RELIABLE PARTNER

### + PERSONAL POINT OF CONTACT

Your personal point of contact from our team will listen to you and explain the options.

### + MADE IN GERMANY

With our Made in Germany production, we guarantee quality and availability.

### + APPROPRIATE SOLUTION

We develop the optimal solution for your requirements, independently of technology.

### + SEAMLESS SERVICE

Our comprehensive service network is always on hand to help.

### + REGIONALLY ROOTED, GLOBALLY CONNECTED

As a family-owned company with branches worldwide, customer relations are always our top priority.

**Weber Marking Systems GmbH**

Maarweg 33 / 53619 Rheinbreitbach
T +49 (0)2224 77 08 0 / info@webermarking.de
weber-marking.com

2026-09-25 | en_INT

MADE IN GERMANY

WEBER MARKING SYSTEMS